ECE137b Third Design Project Option

You must purchase lead-free solder from the electronics shop. Do not purchase solder elsewhere, as it will likely be tin/lead solder, which is toxic. "Solder-sucker" desoldering tools are not permitted in the lab, as they disperse a dust of solder granules into the air and onto surrounding surfaces. If you are also foolishly using tin/lead solder, you will then poison yourself. Again, use lead-free solder from the shop, and use desoldering wick to remove solder. ***Projects assembled using lead-containing solder will receive a grade of zero***.

General Comments

You have a choice of doing one of three design projects, a fiber optic link, a switched mode power amplifier, or an acoustic phased array. All are intended to be
-Representative of real applications, incorporating aspects of both circuit and system design.
- Highly independent in character. It is strongly expected that there should be minimal similarity between projects designed by different groups.
-A significant fraction of the class grade and hence a significant time commitment

You will be working in groups of 2.

Construction Hints

These are high frequency circuits. Construction on a proto-board is of value for DC testing and for AC functional testing at signal frequency well below that of the real design. Functional high speed operation will require a soldered design with tight physical construction practices. Construction on a circuit board with a ground plane is very strongly recommended, as is signal wiring with adhesive copper tape. See the 137a web site for information on construction practices.

Background- Acoustic (and other) Phased Arrays

Let us quickly review a set of ideas from wave diffraction and constructive and destructive interference. Suppose we wished to direct sound from an array of speakers to a single point, represented by a microphone, as in Figure 1 below.

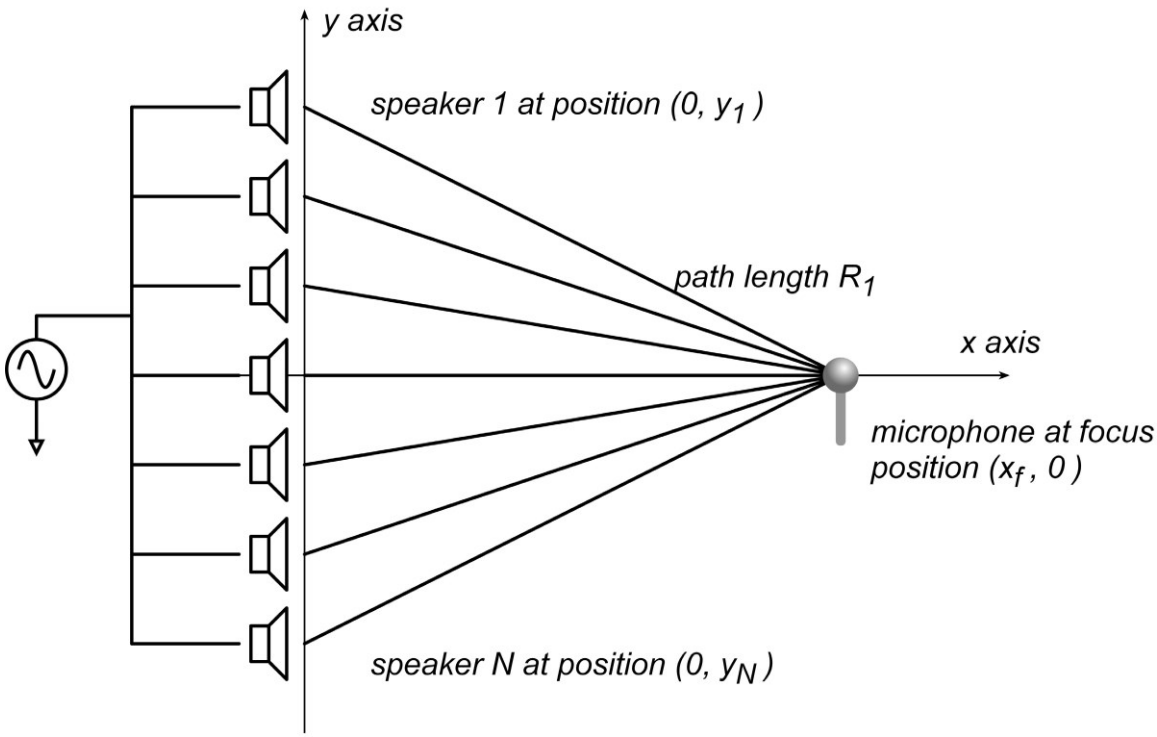

Figure 1: Array of speakers delivering signals to a microphone.

We must now understand a small amount about sound. The speakers produce a sound pressure *p* (lowercase p !) proportional to the voltage applied to them. Electrical signal power is proportional to the square of voltage, $P_{electrical} \propto V^2$, while acoustic signal power is proportional to the square of the acoustic signal pressure $P_{acoustic} \propto p^2$.

Between speaker 1 and the microphone, at the intended focus point, we have a distance R_1 . You can calculate this easily from geometry. The signal will get weaker from the propagation distance, and will be delayed because of the path length R_1 and the speed of sound. At sea level, sound in air travels at approximate 343 m/s (look it up).

If speaker one is driven with a voltage $V_{speaker,1}(t) = V_1 \cos(2\pi ft)$, then the microphone will produce a voltage $V_{mic,1}(t) = \left(R_o / R_1\right) K V_1 \cos(2\pi f(t + T_1))$. Here K and R_0 are constants involving the properties of the speaker and the microphones. Note that acoustic pressure, and the microphone signal voltage, are decreasing in amplitude in proportion to $1/R_1$, and that there is a time delay $T_1 = R_1 / v_{sound}$, where v_{sound} is the speed of sound. The acoustic power at the microphone is proportional to the square of the pressure. The electrical output power of the microphone is, of course, proportional to the square of the microphone voltage.

If we have N speakers, and *all* are driven by the same voltage $V_{speaker,all}(t) = V_{all} \cos(2\pi ft)$, then the signal voltage at the microphone will be

$$V_{mic,total}(t) = KV_{all}\left[\frac{R_o}{R_1}\cos(2\pi f(t+T_1)) + \frac{R_o}{R_2}\cos(2\pi f(t+T_2)) + ... + \frac{R_o}{R_N}\cos(2\pi f(t+T_N))\right]$$

Because the time delays T_1 , T_2 , … are all different, the signals will add out of phase at the microphone, and the microphone signal voltage will not be N times that produced by a single speaker.

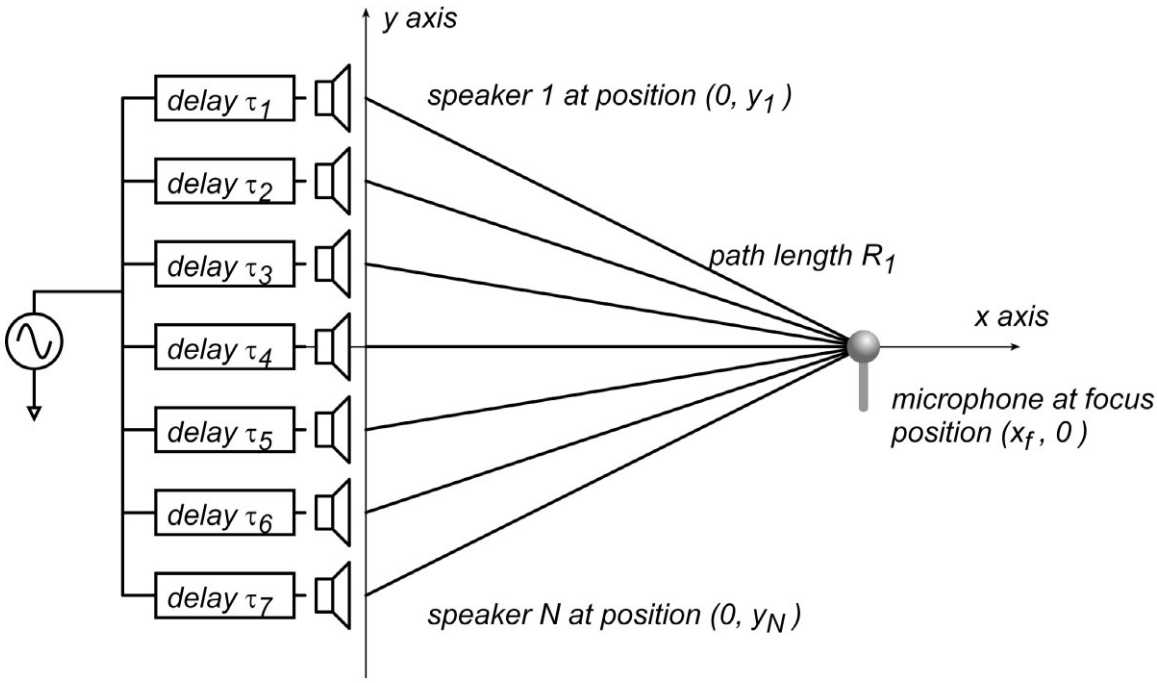

Figure 2: Acoustic phased array: added delays bring the speaker signals into phase at the microphone.

If (Figure 2), we add signal path delays τ_1, τ_2 , …, then the microphone signal becomes

$$V_{mic,total}(t) = KV_{all}\left[\frac{R_o}{R_1}\cos(2\pi f(t+T_1+\tau_1)) + \frac{R_o}{R_2}\cos(2\pi f(t+T_2+\tau_2)) + ... + \frac{R_o}{R_N}\cos(2\pi f(t+T_N+\tau_N))\right]$$

If we set the electrical time delays such that the total delays $(T_1+\tau_1)$, $(T_2+\tau_2)$, … are all equal, then the speaker signals will add in phase at the microphone. The signal voltage produced by the microphone will then increase in proportion to the number of speakers N , and the signal power will increase as N^2 . This is called constructive interference.

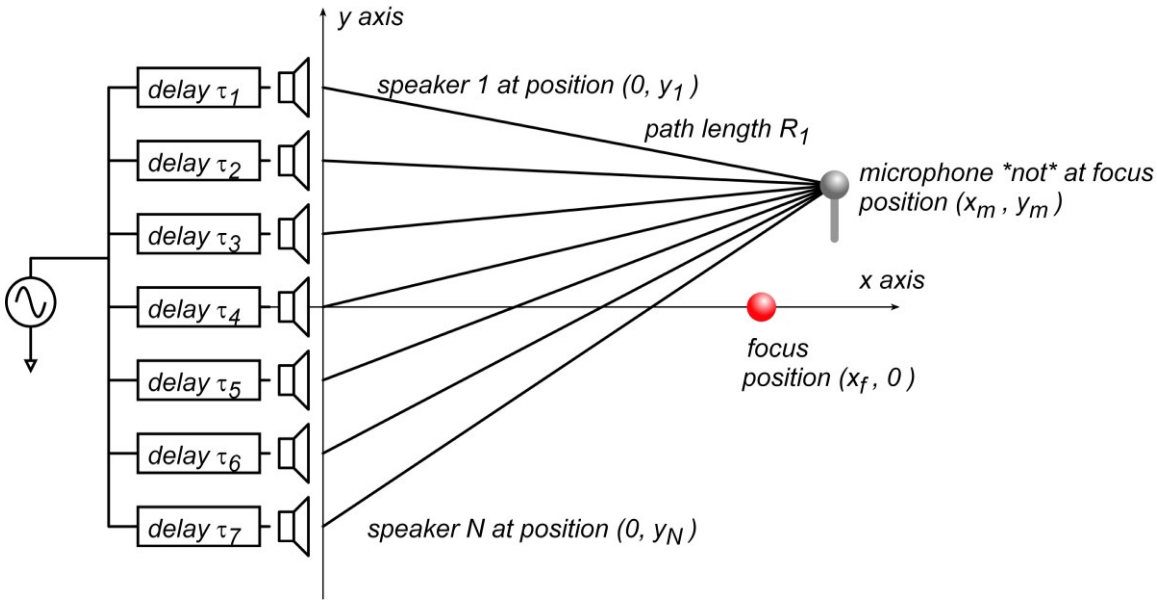

Figure 3: Measuring the sound pressure at some position other than the intended focus.

What about the sound pressure at other positions ? If we now move the microphone, then the path lengths all change, and the total delays $(T_1 + \tau_1)$, $(T_2 + \tau_2)$, … are no longer equal. The signals do not add in phase, the signal voltage produced by the microphone do not increase in proportion to the number of speakers N , and the signal power will not increase as N^2 . The signal is weaker: we do not have constructive interference.

Concisely, the microphone has been moved away from the focus. The array of speakers, with the added time delays, is focusing sound. We can reverse the system, putting a speaker at the focal position, and using an array of microphones. In this manner, we can listen to sound at one specific location. The combination of the focusing acoustic transmitter and receiver is an acoustic imaging system. We have just analyzed an acoustic phased array. These are used in acoustic imaging (sonar) and in ultrasonic imaging in medicine. Identical techniques are used in radar to identify the direction of various objects being tracked. The physical principles, and the method of analysis, are very close to those involved with the focusing properties of lenses, the angular radiation patterns of antennas, and the angular diffraction pattern of gratings..

Over how large an area in the (x,y) plane would we expect the system to focus sound ? In three dimensions, this would be a region in (x,y,z). The width of the focused spot in the y-direction is called the focused beam diameter, while the length of the focused spot in the x-direction is called the focal waist length.

We are focusing sound using a finite number of speakers. This introduces some complications into the discussion. If we were using infinite array of infinitely small

speakers, all adjacent to each other, this granularity would not be present. In that case, we have the classic case of a focused beam.

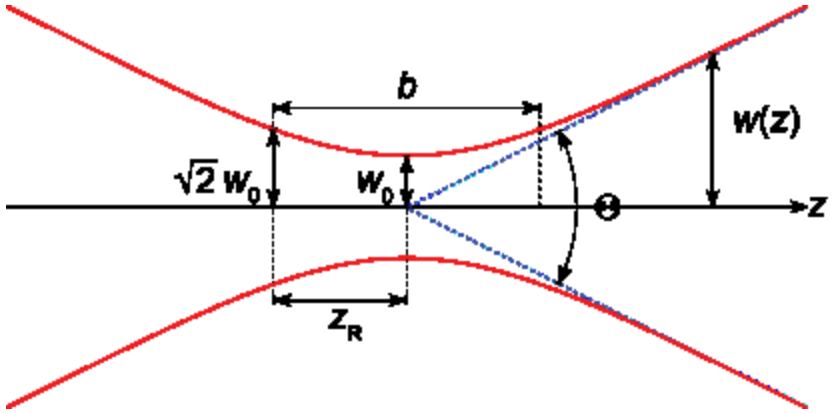

Figure 4: Focusing properties, Gaussian beam

Figure 4 shows the focusing properties of a Gaussian beam. The figure, and the mathematical relationships, are from https://en.wikipedia.org/wiki/Gaussian_beam . Here $W(z)$ is the width of the beam as a function of position z. The minimum beam radius (the focal spot radius) is W_0 , and the waist length is $2z_R$.

At a position *z* along the beam (measured from the focus), the spot size parameter w is given by

$$W(z) = W_0\sqrt{1+\left(\frac{z}{z_R}\right)^2} \quad \text{where } z_R = \pi W_0^2/\lambda \ . \ W(z) = W_0 z / z_R$$

Far away from the focus, we have $W(z) = (W_0 / z_R)\cdot z = (\lambda / \pi W_0)\cdot z$, so, if the beam diameter is $W(z)$ at some distance z , then the focal point radius is $W_0 = (\lambda/\pi)\cdot[z/W(z)]$, and the waist length is $2z_R = (2\lambda/\pi)\cdot[z/W(z)]^2$

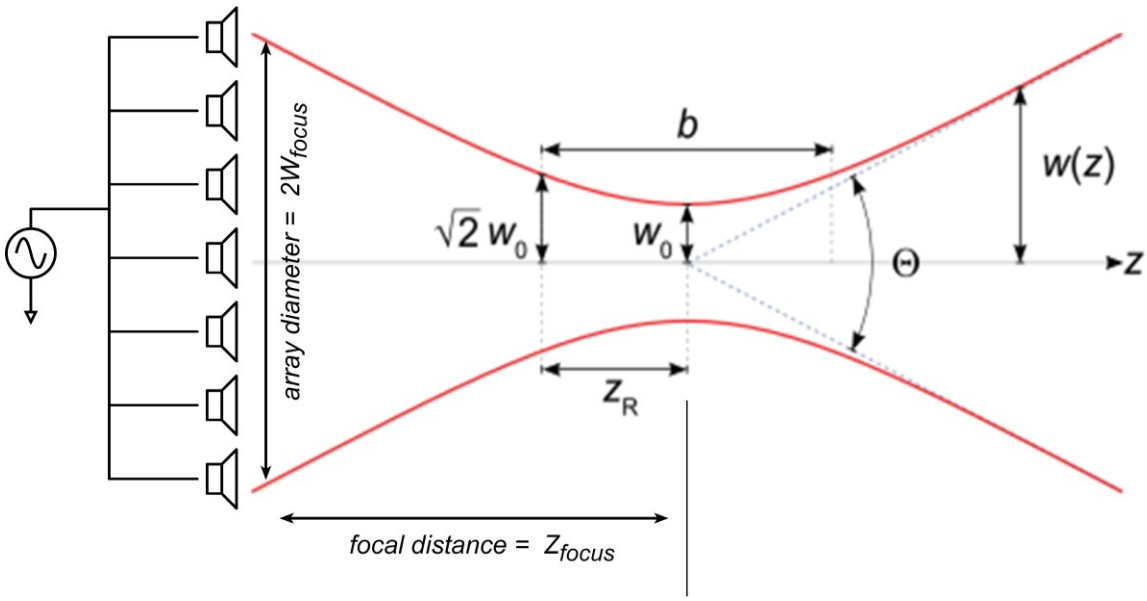

Figure 5: Relating focal parameters to the speaker array

Unfortunately, Wikipedia is using a different set of (x,y,z) axes than we have been using. We can nevertheless relate Wikipedia's analysis to our problem (Figure 5), in particular, we have a focal point radius $W_0 = (\lambda / \pi) \cdot \left[Z_{focus} / W_{focus} \right]$ and a waist length $2z_R = (2\lambda / \pi) \cdot \left[Z_{focus} / W_{focus} \right]^2$

<u>Assignment:</u> You must write a MATLAB program which computes the acoustic intensity as a function of position

<u>Aliasing</u>: The sound is focused at one point because, as we move away from the speakers, the signals from the speakers become out of phase at the microphone. Because there are a finite set of speakers at discrete locations, there will be other, unwanted locations at which the signals from sets of speakers become 360 degrees out of phase, i.e. again become in phase. These false, unwanted focal points arise from similar effects as higher-order diffraction from diffraction gratings. There is also a strong relationship to frequency aliasing in sampled-time systems. If you move the speakers very far apart, expect to see strong false focusing points.

<u>Specific Challenge #1: focusing sound:</u>

I saw this device (overhead) in a museum, used to strongly localize the delivery of sound to people standing close to a specific display. It had about 100 small speakers in concentric rings.

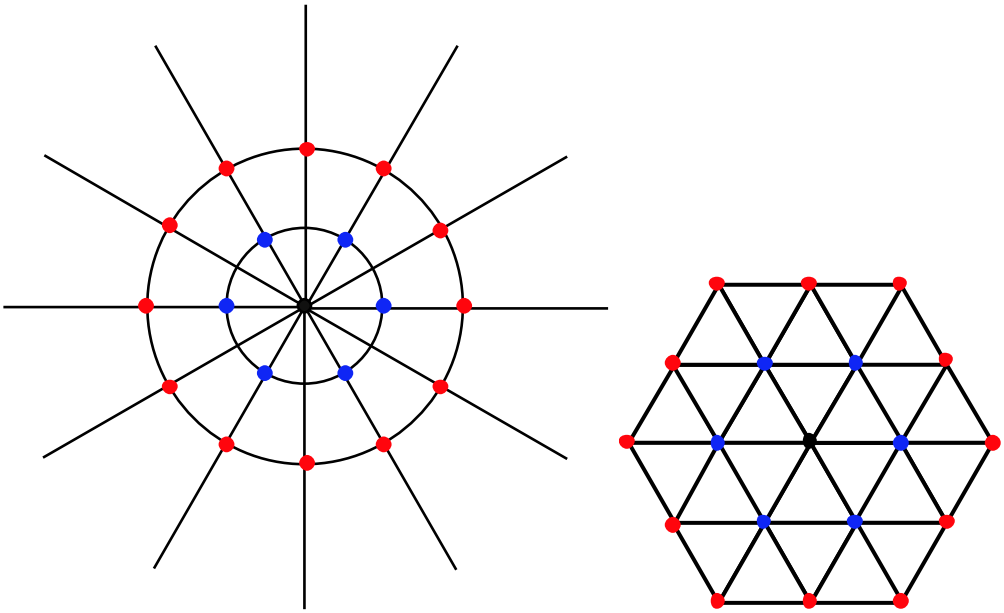

Suppose we have an array of 19 speakers in the circular pattern at left, or (somewhat less exactly, but easier to measure) an array of 19 speakers on the hexagonal pattern at right.

If we examine this problem edge-on, we can equalize the path lengths for an on-center receiver with two time delay elements:

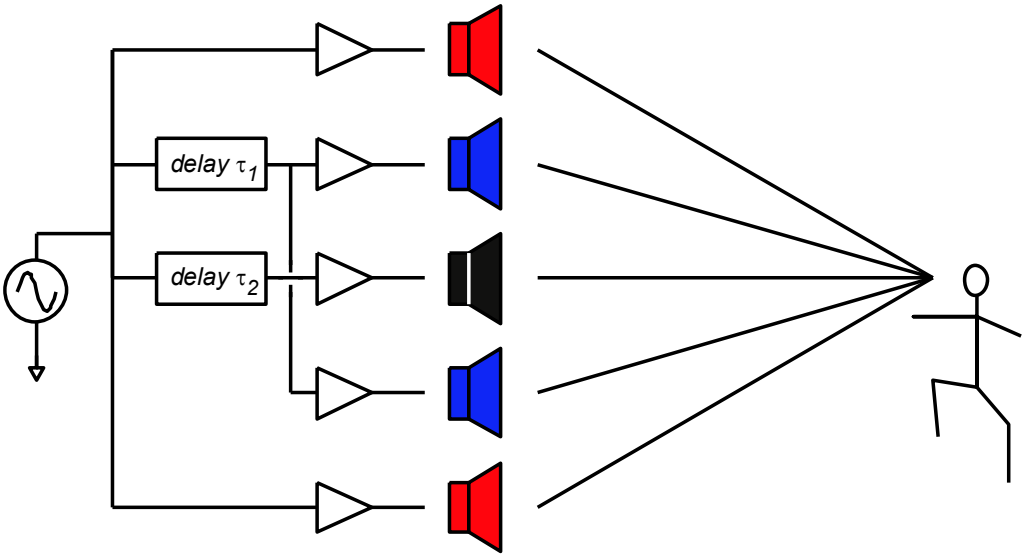

Power amplifiers

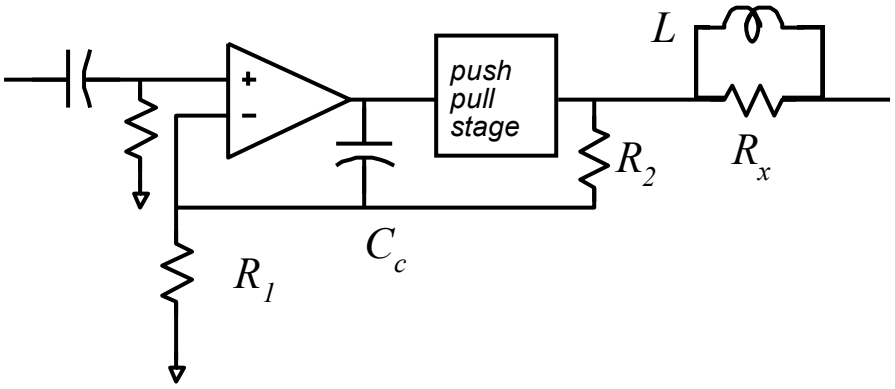

Some kind of small audio power amplifier must be designed. Three are needed to drive the 3 separate speaker rings. One amplifier must drive 12 parallel speakers, a 0.75 Ohm load, hence design is not trivial. To simplify the task, use a Bi-FET op-amp (LF351/LF353 series) with a bipolar or FET output stage. The R_x/L output network improves loop stability given a capacitive load. C_c is a loop compensation capacitor. Further details of the design will be given during the lab review.

The push pull stage can be very simple, like that below. Think about the output current and the required transistor size

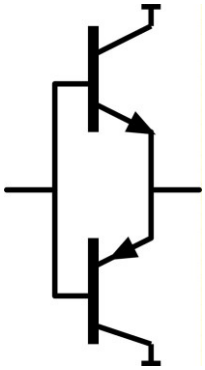

Given the very low load impedance associated with up to 12 speakers in parallel, it would be wise to use series-parallel arrangements

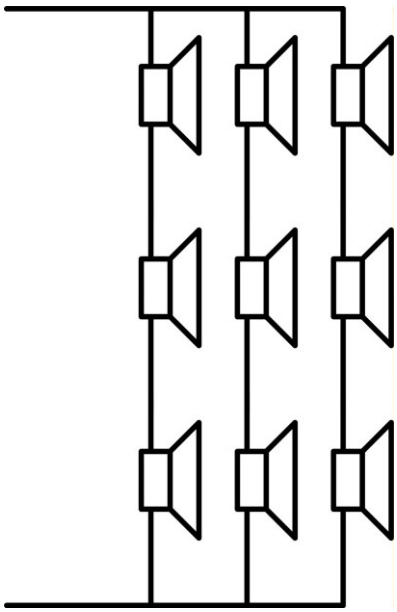

Given the voltage division associated with this, you will need to appropriately adjust the voltage gains of the op-amp stages. ,

Choice of implementation

You have two choices for the lab. You can use analog signal processing, using op-amp delay states, or you can synthesize the signals using a small microprocessor with build-in DACs.

microprocessor approach

please speak to the TA about this.

Delay element approach

If we use analog signal processing, Time delay elements τ_1, τ_2 must be realized. In the ideal case, a delay τ_1 would have transfer function $H_1(j\omega) = \exp(-j\omega\tau_1)$, hence $\| H_1(j\omega) \| = 1$ and $\text{angle}(H_1(j\omega)) = -\omega\tau_1$. Short of using a transmission-line of ~km length, this can only be approximated.

A better solution is to use a set of N active filters in cascade: $H_i(j\omega) = \{h_i(j\omega)\}^N$. We pick $h_i(j\omega)$ to have close to unity magnitude and linear phase over the desired frequency range, and then cascade a series of these to obtain the necessary total phase shift (total delay).

The necessary delay can be approximated by using an active filter.
http://www.ti.com/lit/an/snoa224a/snoa224a.pdf and
OA-21 (see the class web page under resources) are good references. With these, you synthesize a second-order transfer function with the desired damping factor and natural resonant frequency

Possibly the best choice of active filter section is the one shown below. Please derive the transfer function for this. It has constant gain amplitude at all frequencies and nearly linear phase over quite a wide frequency range. A cascade of some number of these filters should work well in producing the necessary time delays.

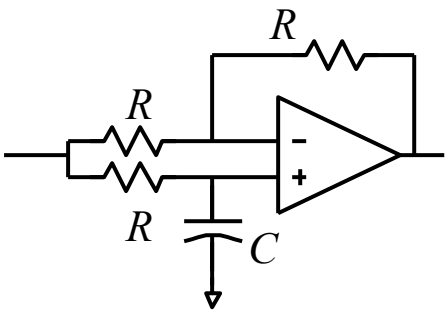

The Specific assignment

Your objective is to demonstrate the focusing of sound, building hardware to do this, modeling it mathematically both by hand and by a computer program you write, and comparing the measurements with the hand calculations and the computer simulations.

To realize this, you must
1) characterize the characeteristics of the speaker/microphone combination.
2) build 3 audio power amplifiers to drive these. One Amplifier must drive 1 speaker, one must drive 6 speakers, one must drive 12 speakers.
3) Synthesize the time delays either using analog delay stages or a microprocessor with DACs.
4) Connect the system and measure the acoustic intensity as a function of position.
5) write a Matlab program to compute what you should expect to measure, and compare this analysis with your measurement.

The project has three check off dates

<u>First Check off date:</u>

a) Measure the speaker's frequency response. To do this, make the configuration below, with the speakers separated by several feet, and measure Vout/Vin. Note that the

speakers are mounted on a baffle board, and that the speakers must be mounted in a hole in the board rather than mounted stuck onto the board----this blocks the acoustic signal from the back side of the speaker.

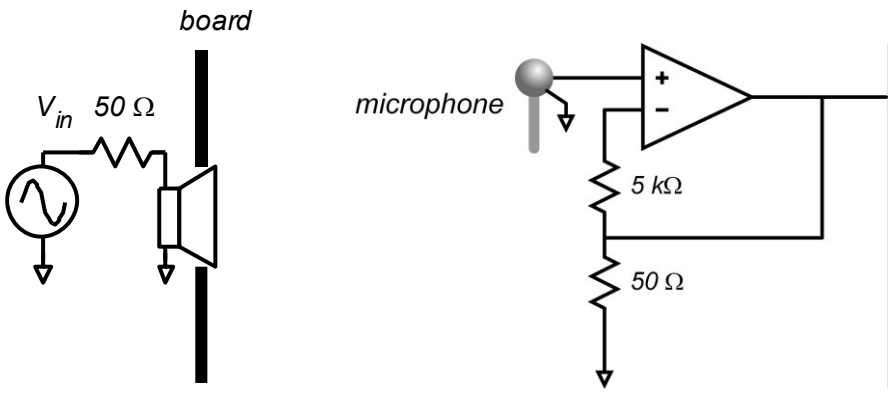

The speakers should be separated by at least 10 times the piston diameter. Vary the frequency and determine the useful frequency range.. Higher frequencies will make the wavelength shorter and allow you to focus sound using a smaller diameter for the speaker array

<u>Second check off date</u>

a) Demonstrate the audio power amplifier. Demonstrate that it may stably drive a low (3/4 Ohm load). You may use a Bi-FET op-amp (as shown above) as part of the amplifier, but you must use a full-custom discrete component output stage for this.

The gain, frequency response, and maximum peak-peak signal swing should be measured.

b) Write and demonstrate the MATLAB code to compute the frequency response vs. position for the 19-element array. You are free to choose the array diameter and focal length; pick reasonable dimensions , or phase III testing will be hard.

<u>Third check off date</u>

Demonstrate the full system.

a) Demonstrate the acoustic focusing. Measure the acoustic intensity vs position, moving in the plane of the focal point, in a plane closer by one/half waist length to the speaker array than the focal point, and in a plane further away by one/half waist length to the speaker array than the focal point

b) compare your measurements with MATLAB simulation and to hand calculations using the Gaussian beam formulas. Explain any discrepancies. Your experiment must make sense.