Anchorless

A Self-Positioning Ocean Tether

Development Team

Benigno Ortega

Project Lead
Motor Functionality

Ryan Levy

System Architecture
Solar Integration

Winston Lee

GPS and IMU
Integration

Corey Zhou

Control System
Cellular
Communication

Tahereh Mahjerdy

Cellular
Communication

Project Overview

- Spotter buoy is a data collection aquatic system that provides real-time measurements for Oceanography research
- Maintenance and repositioning requires more time and resources
- Design a system to autonomously keep a buoy near the desired location

Design Overview

- Low-power system capable of repositioning to new location
- Send command for vessel to move to desired location
- Vessel takes the target location then uses current location and orientation to calculate rudder angle and thruster power needed to navigate to the new point
- Once system reaches destination, go into idle state
- When buoy drifts away from specified radius, it will automatically detect and move back to the central location

Idle State

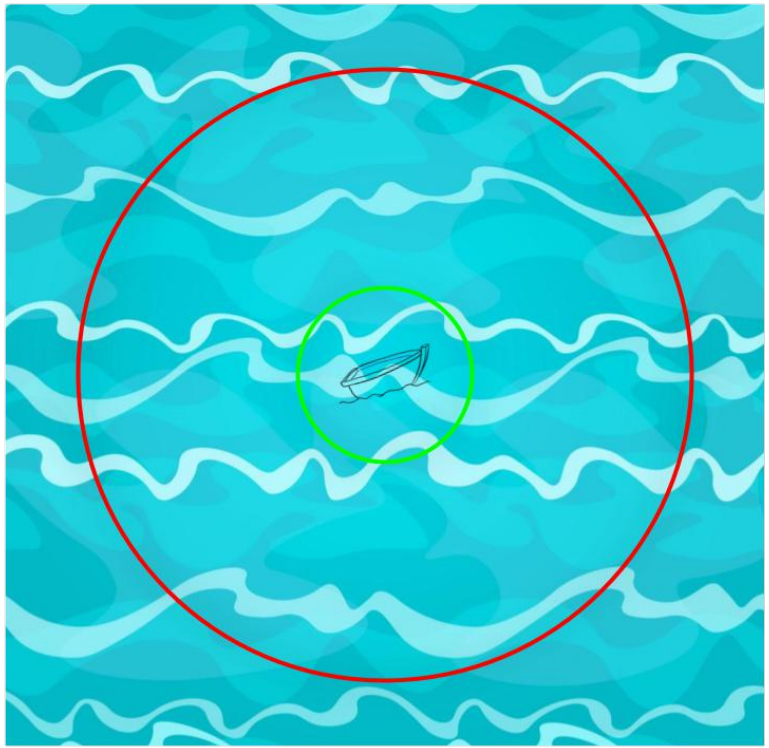

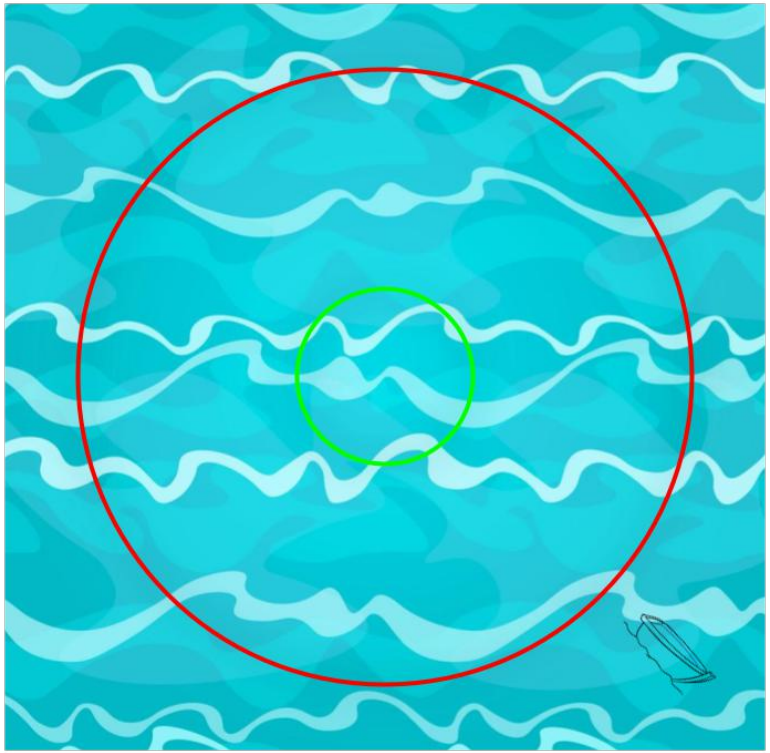

Goal State

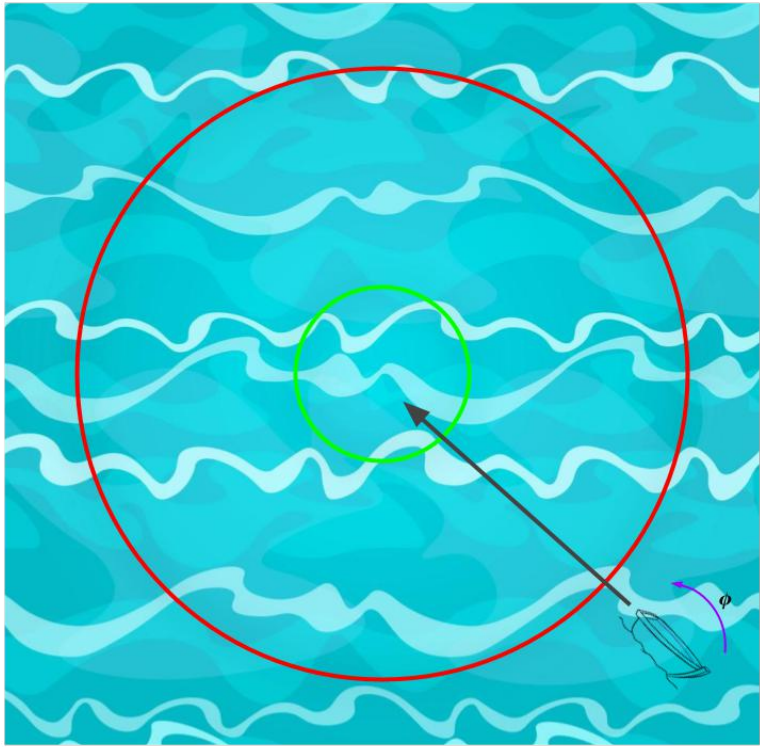

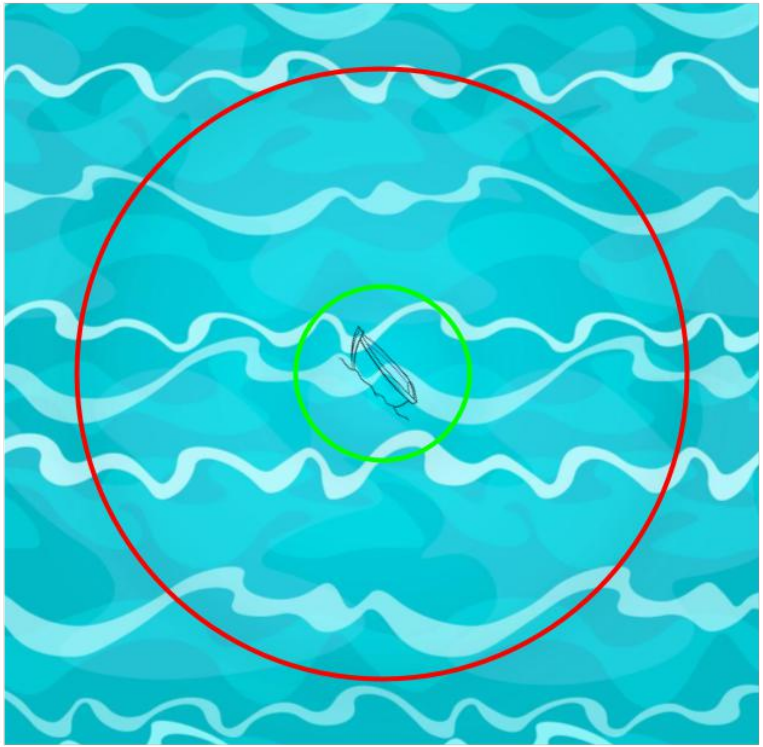

Idle State

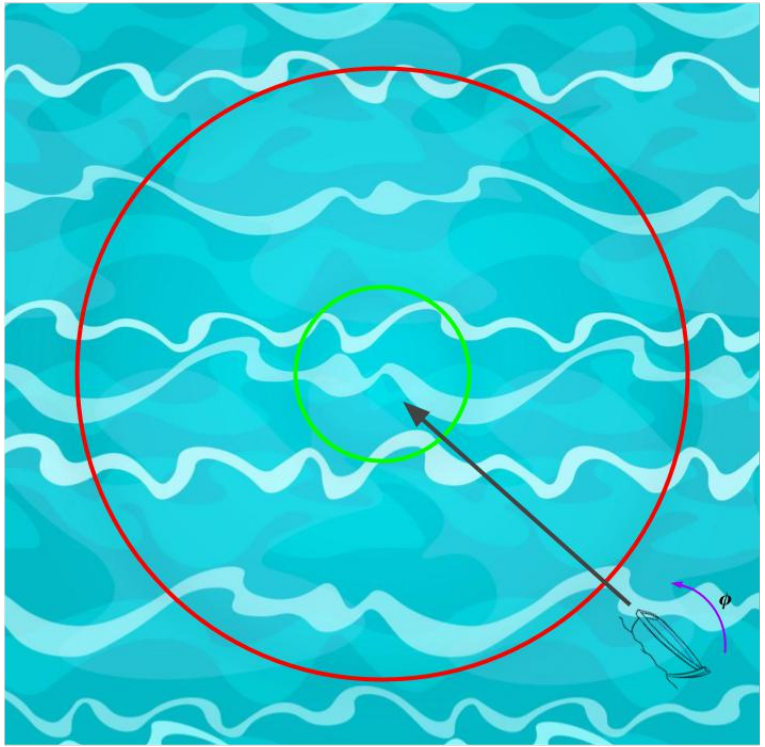

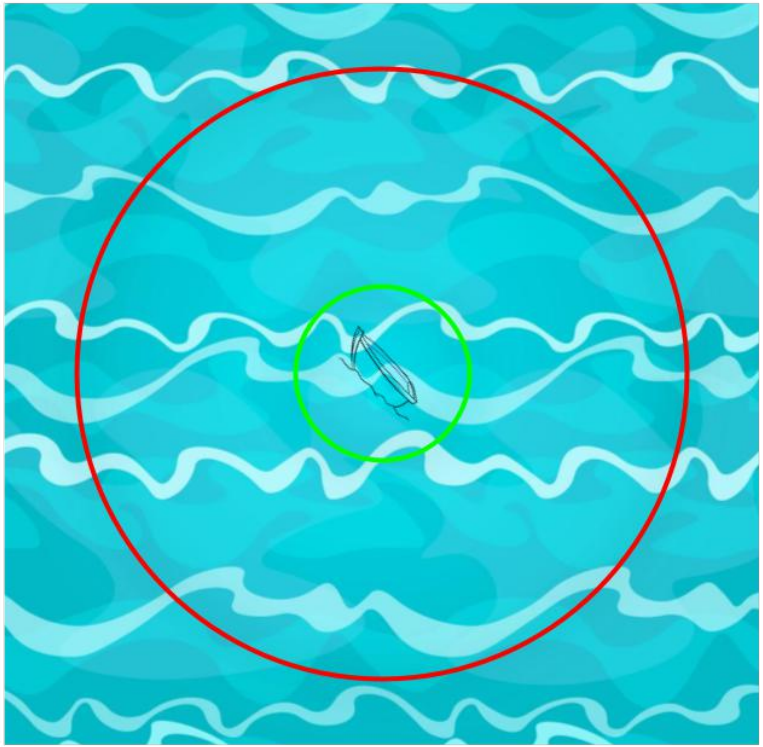

Hardware Schematic

Controller

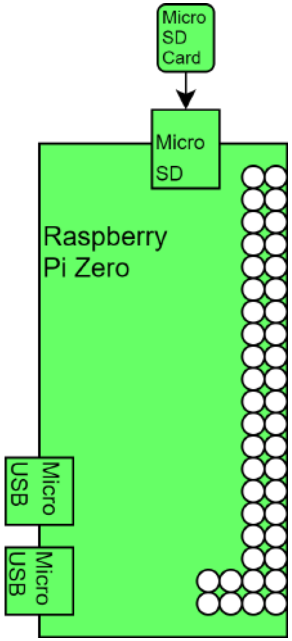

Hardware Schematic

Controller

Power

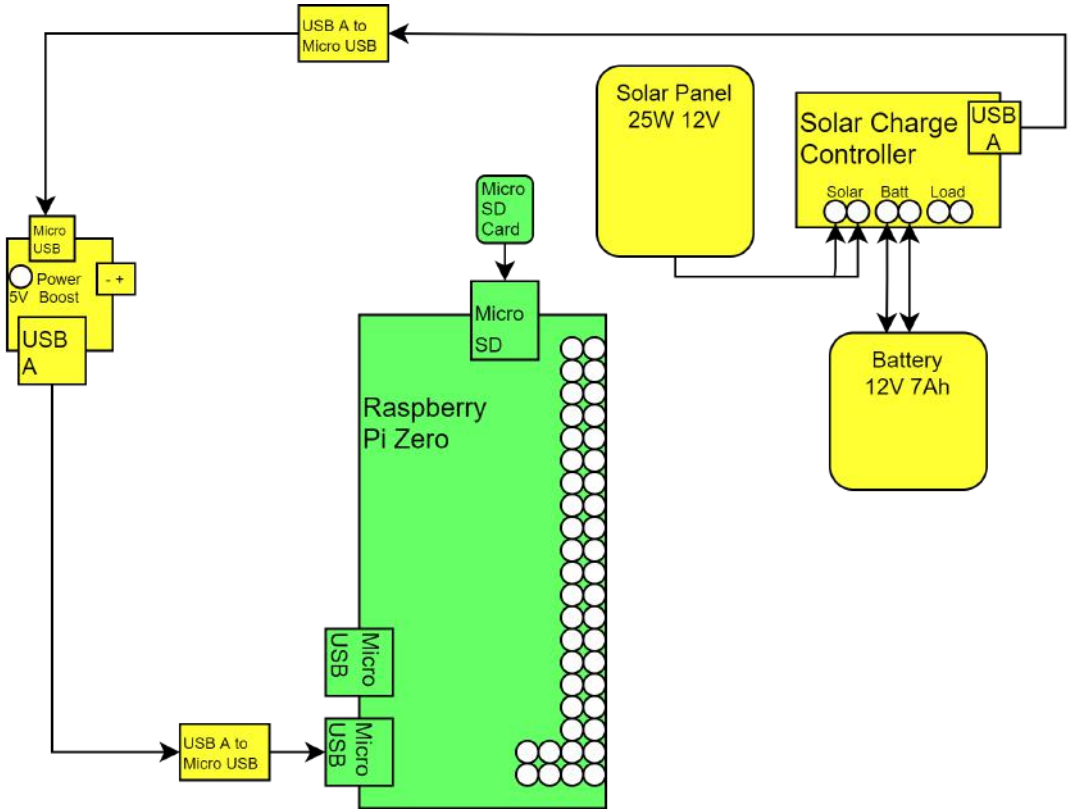

Hardware Schematic

Controller

Power

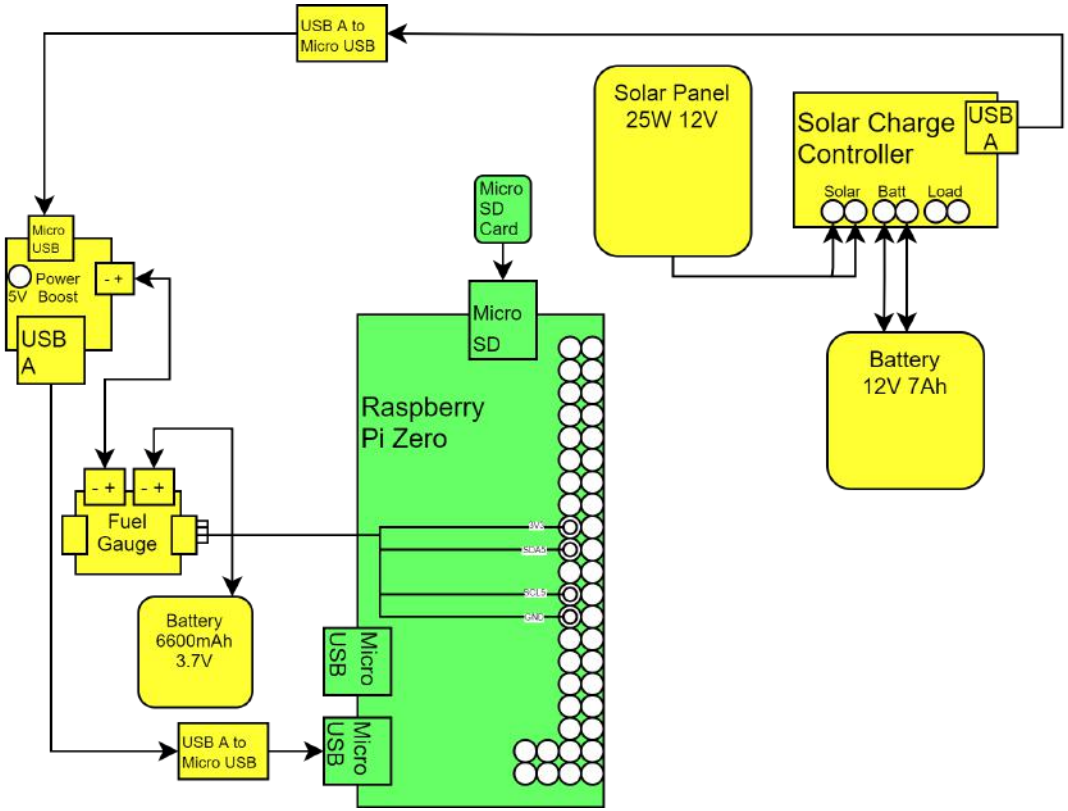

Hardware Schematic

- Controller
- Power
- Thruster

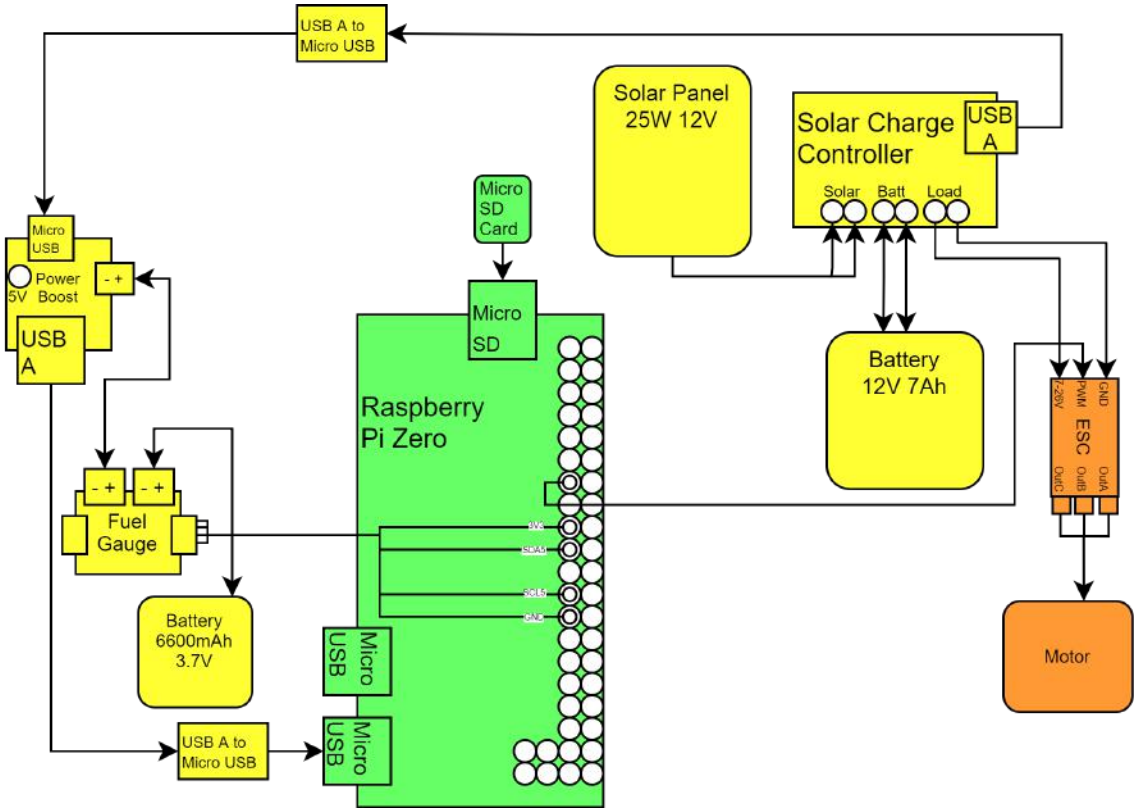

Hardware Schematic

- Controller
- Power
- Thruster
- Rudder

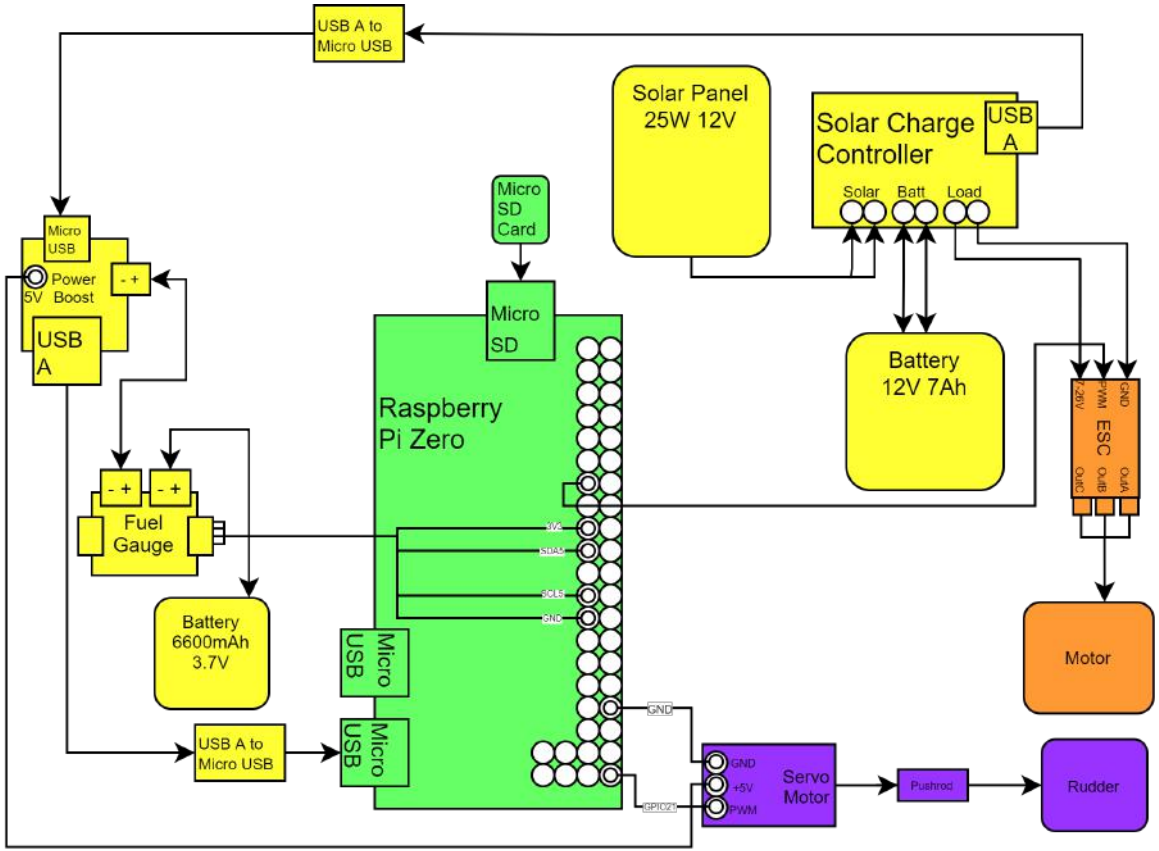

Hardware Schematic

- Controller
- Power
- Thruster
- Rudder
- Pose

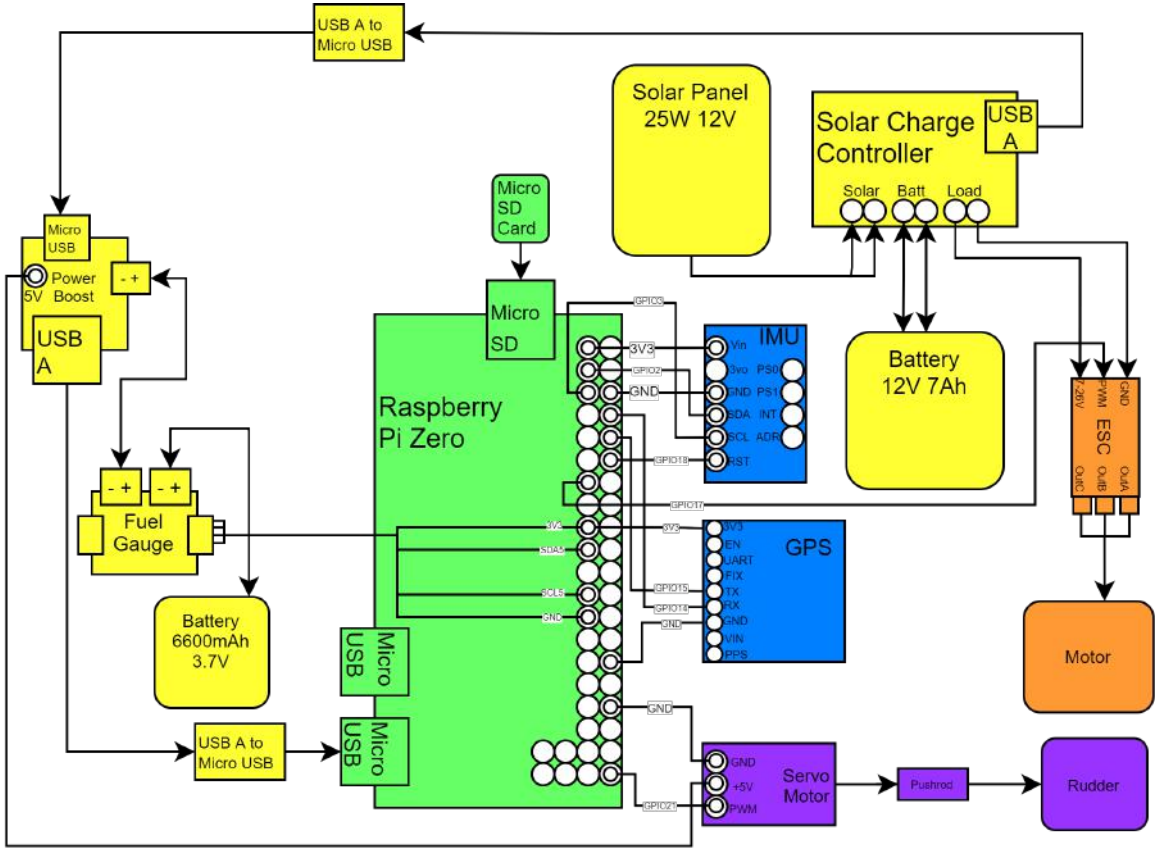

Hardware Schematic

- Controller
- Power
- Thruster
- Rudder
- Pose
- Communication

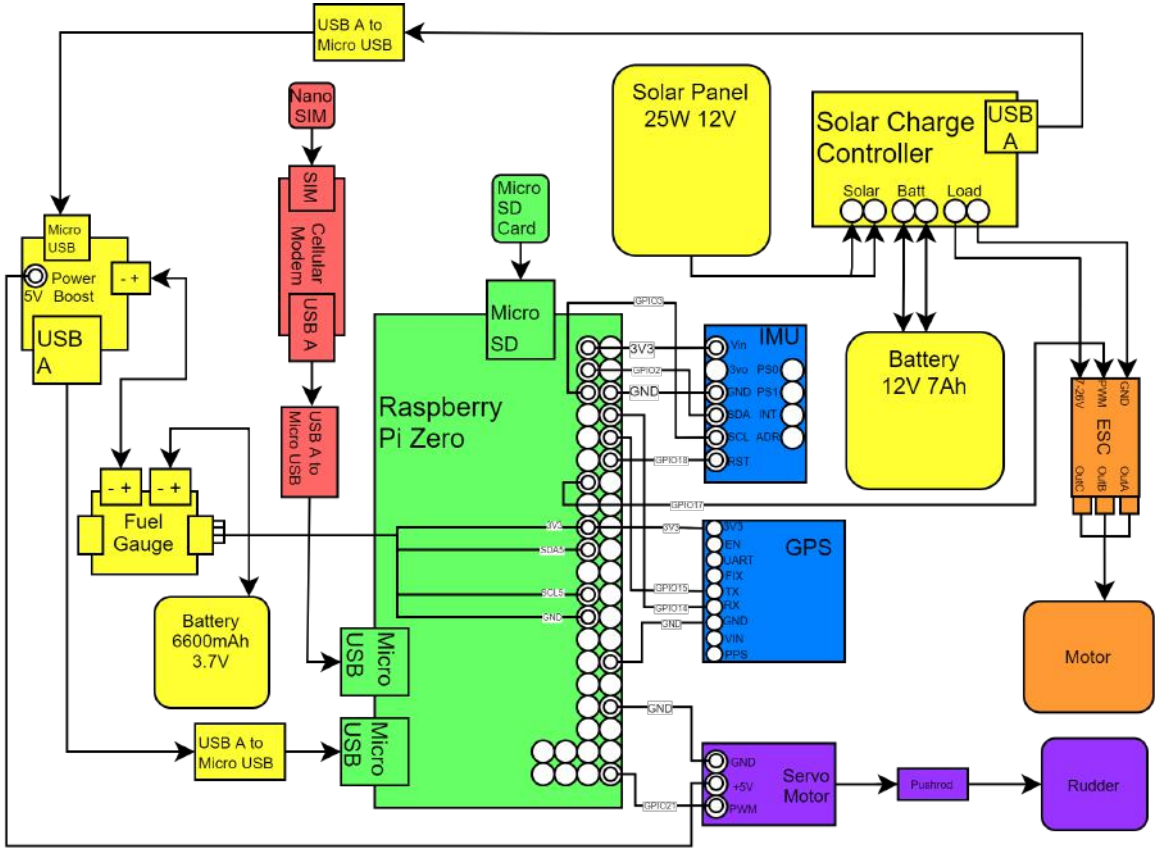

Solar Power

- Boat thruster requires a lot of power when running. To account for this, we have a large 25W solar panel to continuously charge our 2 batteries from sunrise to sunset
- Solar charge controller connects to panel, 12V battery, and thruster
- Powerboost connects to USB, charging 3.7V battery and powering Raspberry Pi
- Fuel gauge measures battery level and sends to Pi
- Lasts over 72 hours

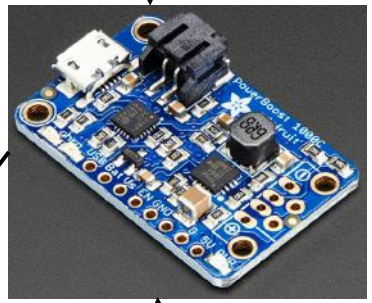

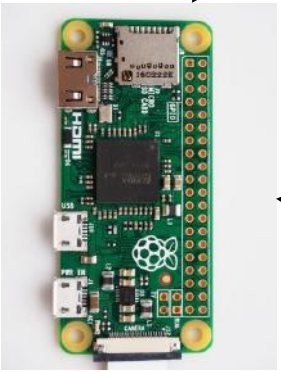

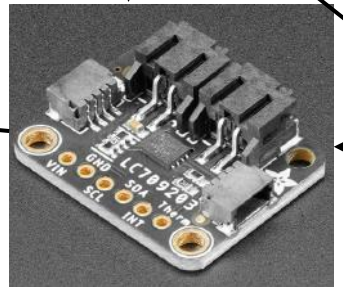

Raspberry Pi Zero W

- Our main microcontroller
- 1GHz single core CPU
- Low power consumption
- Plenty of configurable I/O ports without being overkill for the operations needed
- Connects to our digital compass, GPS, servo motor, speed controller, cellular modem, fuel gauge, and power boost

Reading Data

GPS: Adafruit Ultimate GPS

- 10 Hz update
- Accuracy within 50 feet in our system

IMU: CMPS12

- Returns bearing with 4 significant digits
- 100 Hz update

Navigation & Propulsion

Blue Robotics
T200 Thruster

- T200 Thruster propels system towards destination
- Servo : 8 kg/cm stall torque, 0° - 180° hand rotation
- Navigate with changes in rudder angle with pushrod connected to servo motor

HH Aluminum
Alloy Rudder

Tower Pro SG90
Analog Servo

Cellular Communication

- Hologram Nova R410 (LTE Cat-M1) - 75 Kb/s Upload/Download
- USB 2.0 at 480 Mb/s
- Low Power Consumption
- Import anchorless.py on home computer
- HTTP Requests from Desktop PC through Hologram.io Cloud to modem

Control System

- Calculates rudder and thruster control signals from GPS and IMU
- Piecewise linear function from haversine distance to thruster control
- PID controller for IMU and Haversine bearing to rudder control

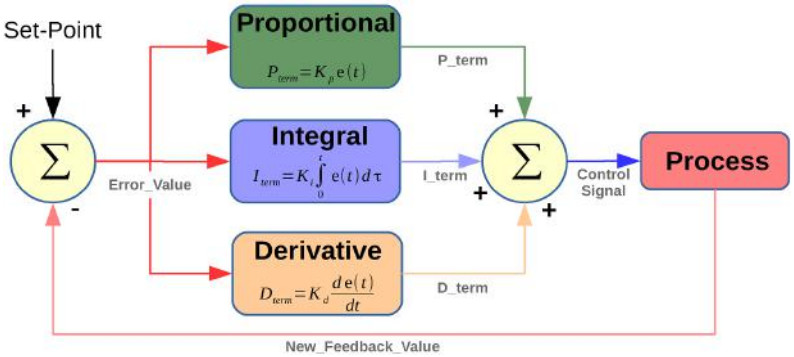

Functional Flow Diagram

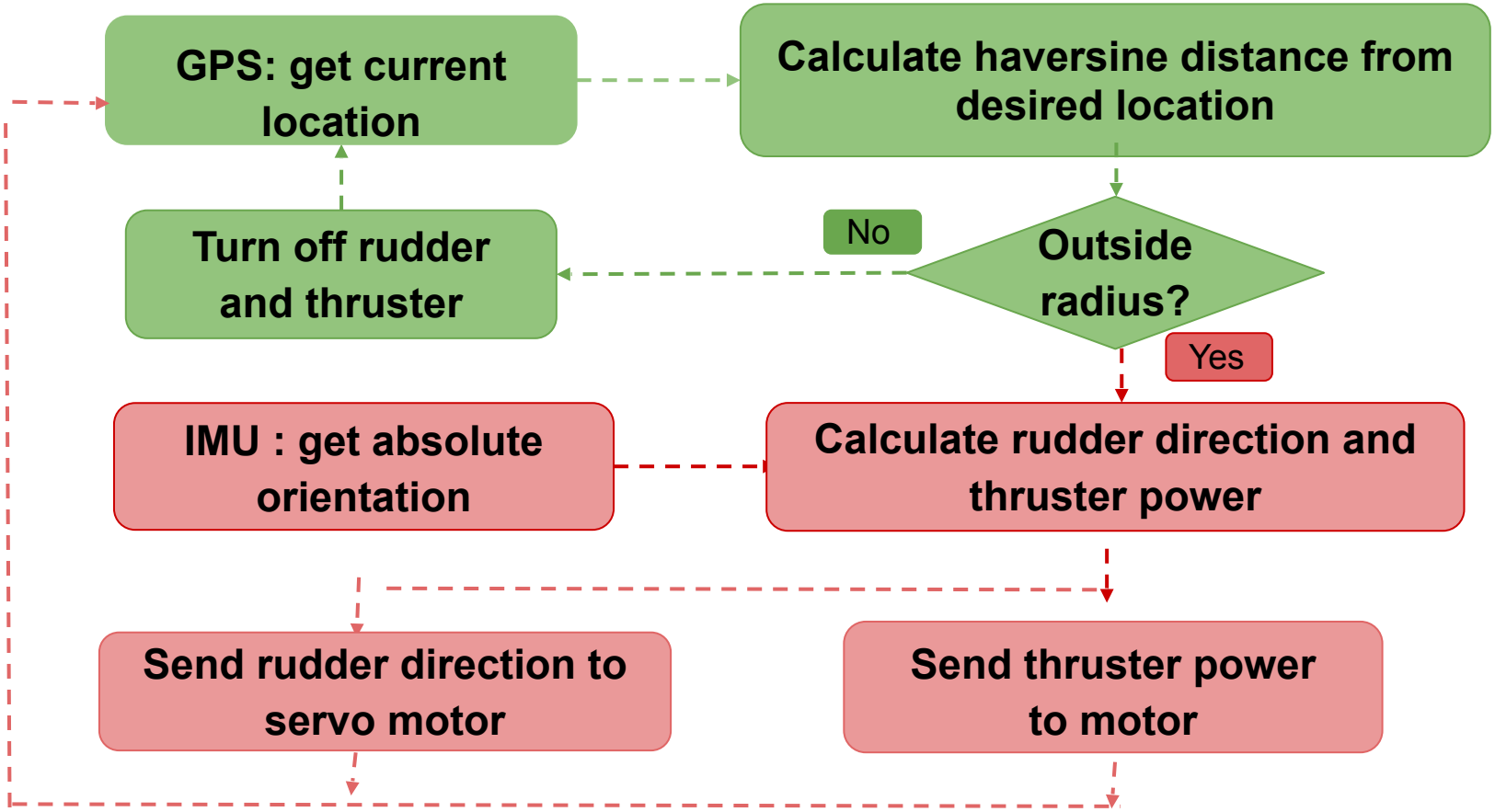

Final Product:

Connection to Website

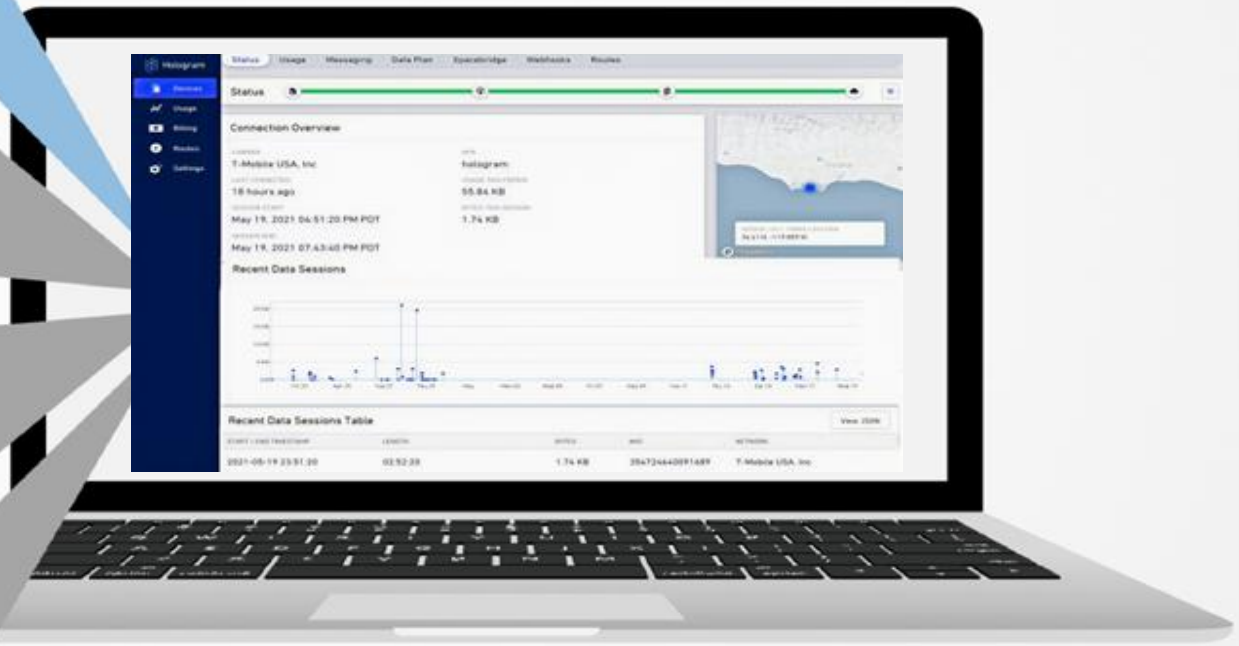

Final Product:

Marine Vehicle

Marine vehicle: replace typical anchorage system with an autonomously repositioning vessel that tethers a buoy to a designated zone

Final Product:

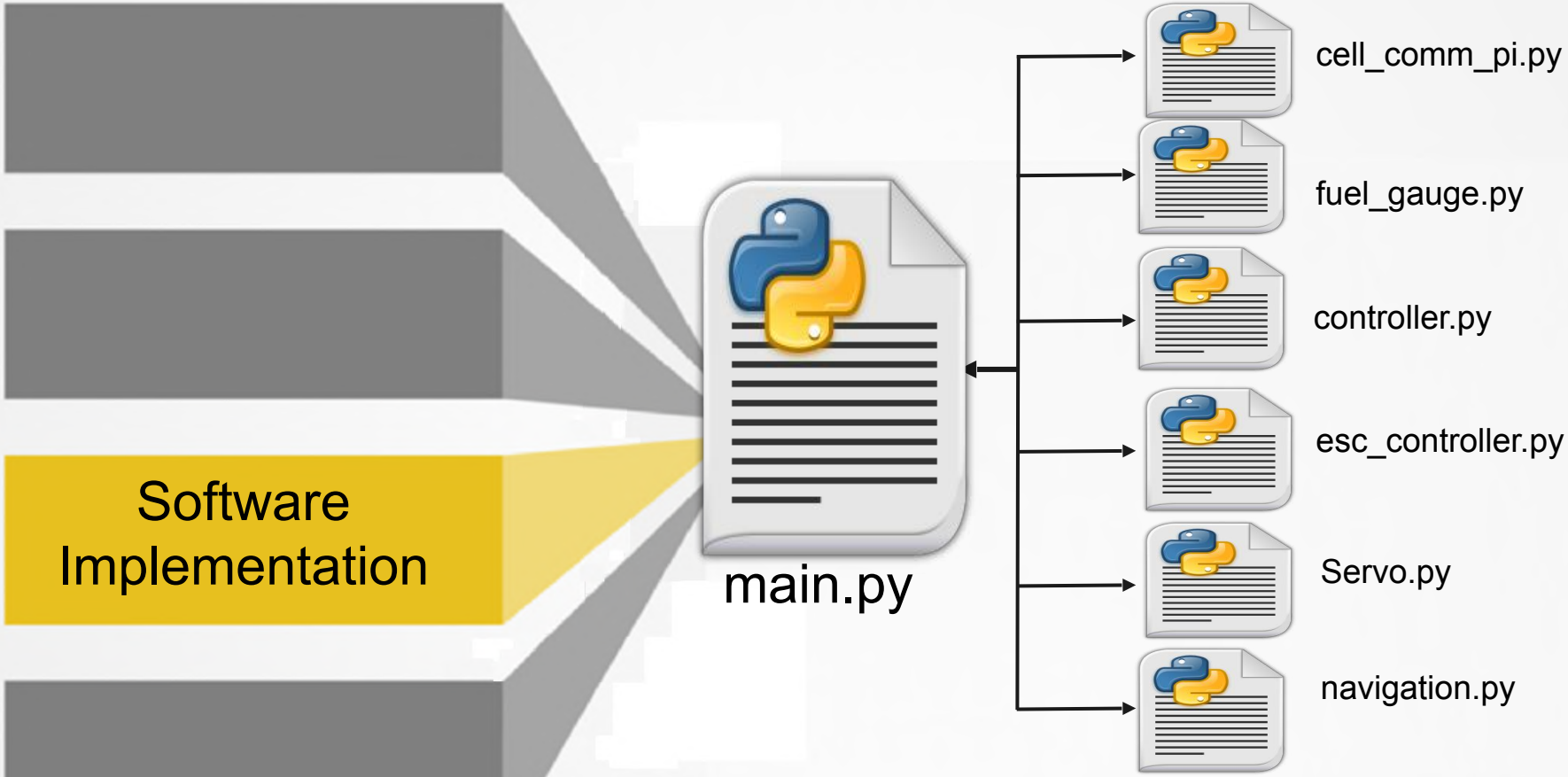

Final Product:

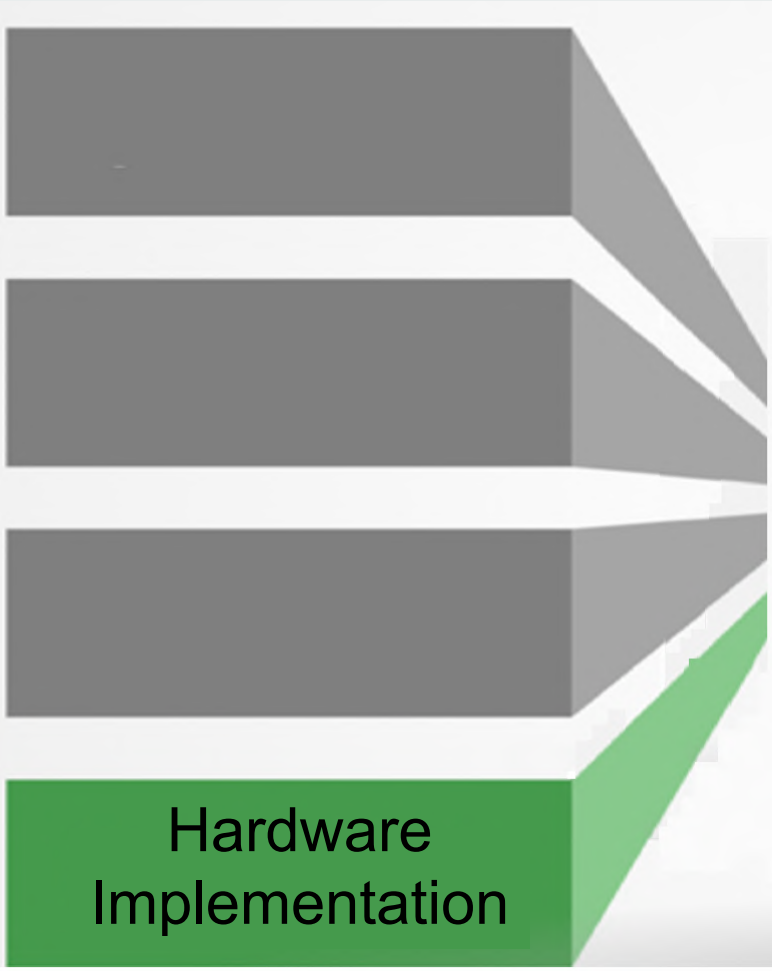

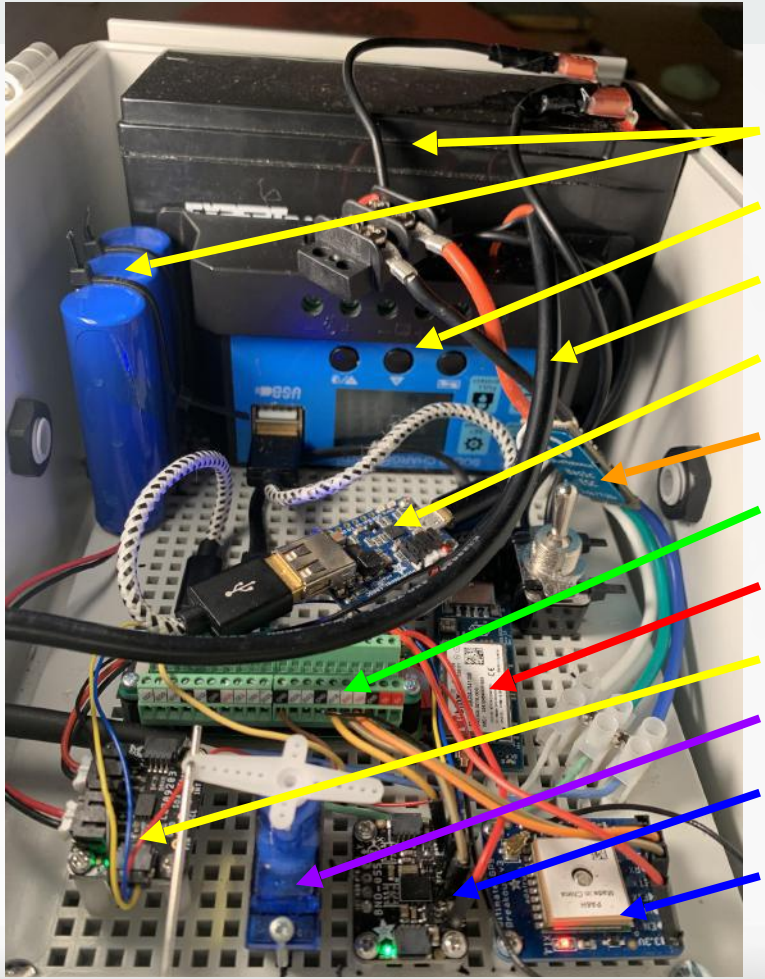

Acknowledgements

- UCSB Coast Lab
  - Nick Nidzieko
  - Christopher Moran

- Professor Yogananda Isukapalli
- TAs
  - Trenton Rochelle
  - Boning Dong

UC SANTA BARBARA engineering

COASTAL OCEANOGRAPHY & AUTONOMOUS SYSTEMS LABORATORY
UNIVERSITY OF CALIFORNIA SANTA BARBARA

CACI
EVER VIGILANT

Thank you!

Any Questions?